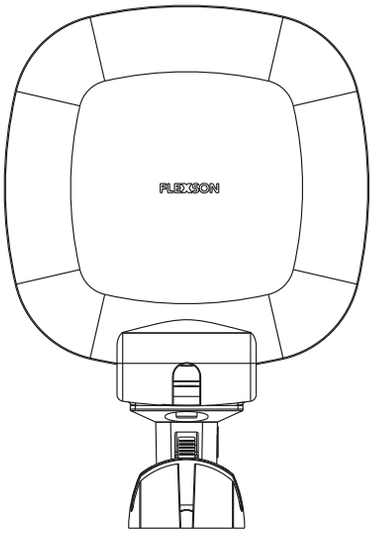
FLEXSON

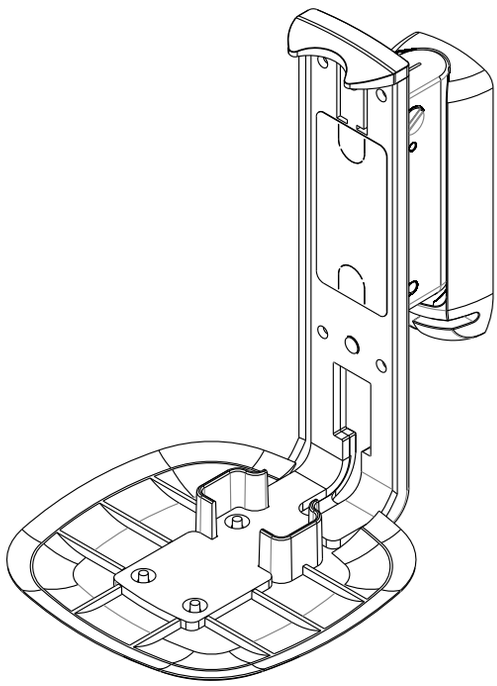

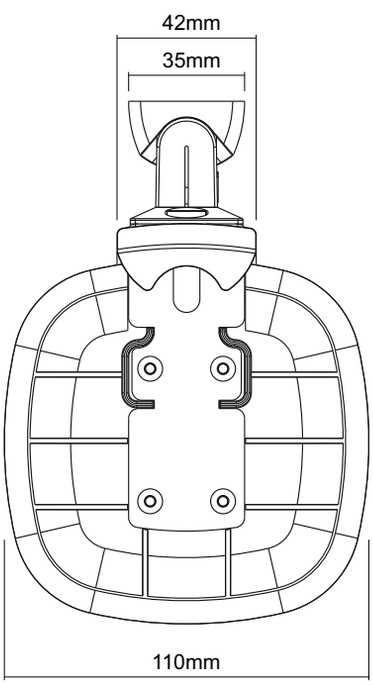
42mm
35mm
110mm

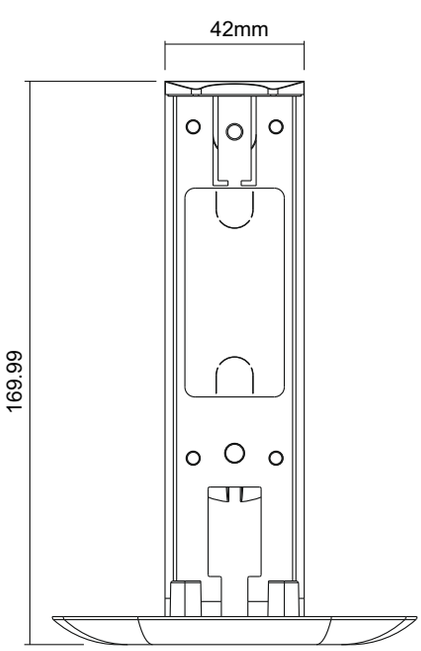
42mm
169.99

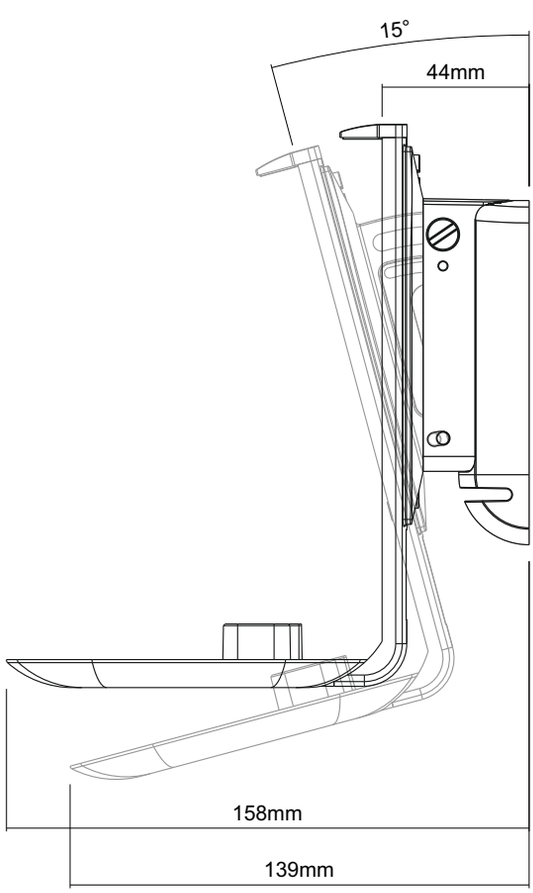
15°
44mm
158mm
139mm